REVERSIBLE BRUSHED DC RIGHT-ANGLED GEARMOTOR

Model Number:

MMP S22-346H-24V GRA52-025

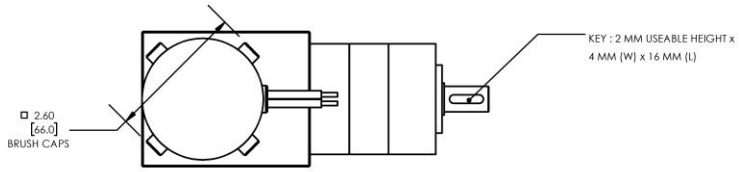

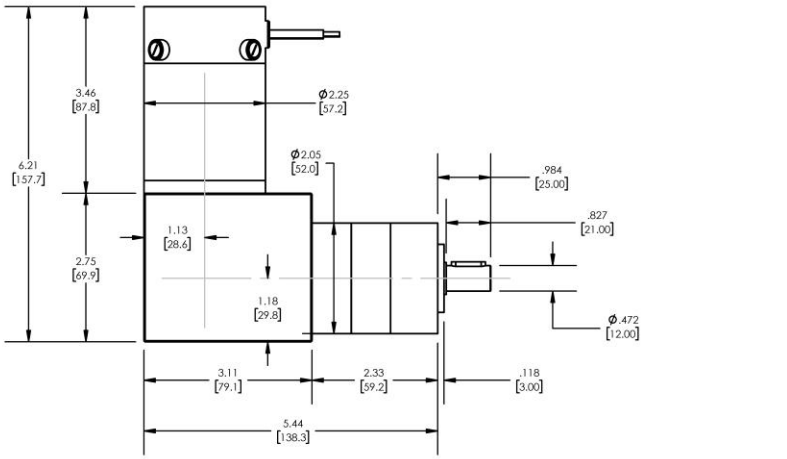

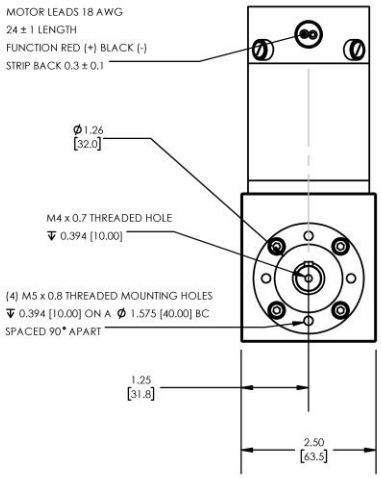

DIMENSIONS ARE INCHES [MM] UNLESS OTHERWISE STATED

PLANETARY GEARMOTOR OUTPUT PARAMETERS:	VALUE	UNITS	TOLERANCE
Gearhead Ratio (exact)	25.01 : 1		
Gearhead Shaft Output Speed (at full-load)	91	RPM	MAX
Gearmotor Rated Continuous Torque	68	In-Lbs	MAX
Gearmotor Rated Peak Torque	164++	In-Lbs	-----
Gearhead Standard Backlash	45	Arc Minutes	MAX
Gearhead Efficiency	75%	-----	-----
Output Shaft Radial Load Capacity	72	Lbs	MAX
Output Shaft Axial Load Capacity	23	Lbs	MAX
Gearmotor Total Weight	5.7	Lbs	MAX

++ All Peak Torque values are dependent upon duty. Contact our sales office for details.

DC MOTOR PERFORMANCE PARAMETERS:	VALUE	UNITS	TOLERANCE
Rated DC Voltage	24	DC VOLTS	-----
Rated Continuous Current	6.8	AMPERES	-----
No-Load Speed	3333	RPM	MAX
Rated Speed	2283	RPM	+/- 15%
Rated Continuous Power Out	97	WATTS	+/- 15%
Rated Continuous Torque	58	OZ-IN	-----
Peak Torque (motor only)	140	OZ-IN	-----
No-Load Current	0.88	AMPERES	MAX
Back EMF Constant (Ke)	7.2	V/KRPM	+/- 10%
Torque Constant (Kt)	9.7	OZ-IN/AMP	+/- 10%
DC Armature Resistance	1.11	OHMS	+/- 15%
Armature Inductance	0.44	mH	+/- 15%
Armature temperature	155	DEG. C	MAX

NOTES:

- ENCODER & BRAKE OPTIONS AVAILABLE – FOLLOW THIS LINK FOR DETAILS
- NEMA MOUNTING FLANGE OPTION AVAILABLE – FOLLOW THIS LINK FOR DETAILS